A46-60

Shower waste and trap with stainless steel grid

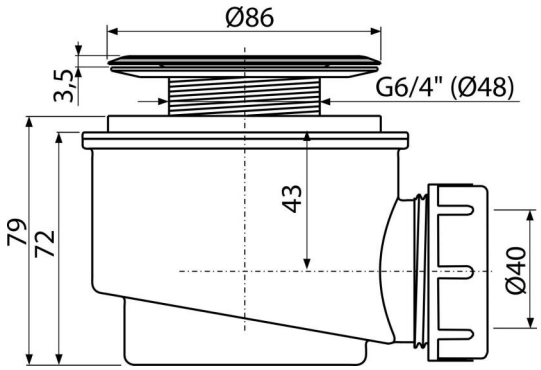

Application

To drain the water from the shower trays
For shower trays without overflow
For shower trays with a drain outlet Ø60 mm

Features

- Material: polypropylene, thermally and chemically resistant, longitudinally welded
- Waste can be connected using elbow A52
- Self-cleaning design of trap
- Building height 79 mm

Scope of supply

- Assembly kit
- Stainless steel outlet grid
- Waste and trap body

Order number, Logistic information

Code	EAN		Weight (piece | packing | palett)	Dimensions (piece | packing)	Quantity (packing | palett)
A46-60	8594045930207	60 mm	0,22 | 6,56 | 203,5 kg	160×120×140 | 590×240×390 mm	30 | 840 pcs

Warranty	Customs code	Norms
2/3 years *	39229000	EN 274

Technical specifications

- Flow rate 47 l/min
- Thermal resistance 95 °C
- Odour trap 50 mm

* For more information about warranty visit https://www.alcadrain.com/warranty.

© 2024 Alcadrain s.r.o | Changes in dimensions and design reserved. | www.alcadrain.com