APS3

Concealed washing machine trap, stainless steel DN40 and DN50

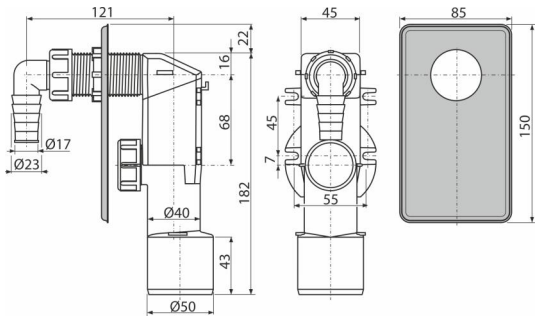

Application

For installation under plaster
To connect the washing machine or dishwasher

Features

- Hooks for a firmer fixing on the wall
- Installation stoppers to connect HT50
- Material: polypropylene
- Connection to HT 40/50
- Service access for easy cleaning

Scope of supply

- Elbow
- Stainless steel cover
- Waste and trap body

Order number, Logistic information

Code	EAN	Weight (piece | packing | palett)	Dimensions (piece | packing)	Quantity (packing | palett)
APS3	8594045931259	0,22 | 8,82 | 267,0 kg	180×70×150 | 590×240×390 mm	40 | 1120 pcs

Warranty

2/3 years *

Norms

EN 274

Technical specifications

- Flow rate 16,8 l/min
- Thermal resistance 95 ˚C
- Odour trap 50 mm

* For more information about warranty visit https://www.alcadrain.com/warranty.

© 2024 Alcadrain s.r.o | Changes in dimensions and design reserved. | www.alcadrain.com