A462-50

Shower waste and trap, with overflow pipe and elbow

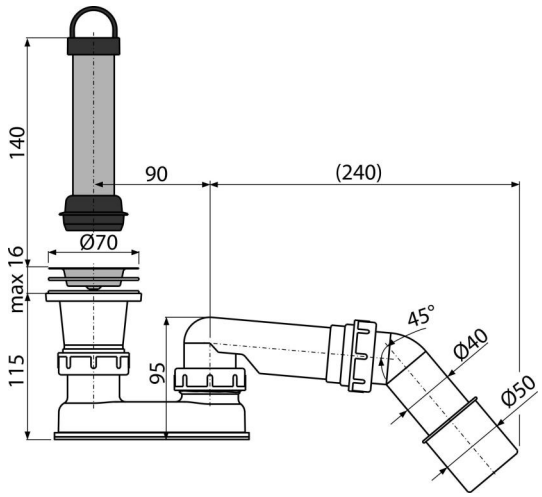

Application

To drain the water from the shower trays
For shower trays without overflow
For shower trays with a drain outlet Ø50 mm

Features

- Connection to waste pipe Ø40/50 mm
- Using an adapter you can increase the water level by 140 mm

Scope of supply

- Adapter for increasing the drain water surface
- Elbow 45°
- Chrome-plated stainless steel outlet grid
- Floor drain
- Odour trap of polypropylene, thermally and chemically resistant

Order number, Logistic information

Code	EAN		Weight (piece | packing | palett)	Dimensions (piece | packing)	Quantity (packing | palett)
A462-50	8594045937022	50 mm	0,39 | 13,70 | 239,2 kg	210×80×180 | 590×390×430 mm	35 | 560 pcs

Warranty

2/3 years *

Norms

EN 274

Technical specifications

- Flow rate 48 l/min
- Thermal resistance 95 ˚C
- Odour trap 50 mm

* For more information about warranty visit https://www.alcadrain.com/warranty.

© 2024 Alcadrain s.r.o | Changes in dimensions and design reserved. | www.alcadrain.com