A810-DN50

Sink waste and pipe trap with stainless steel grid DN70 and connector

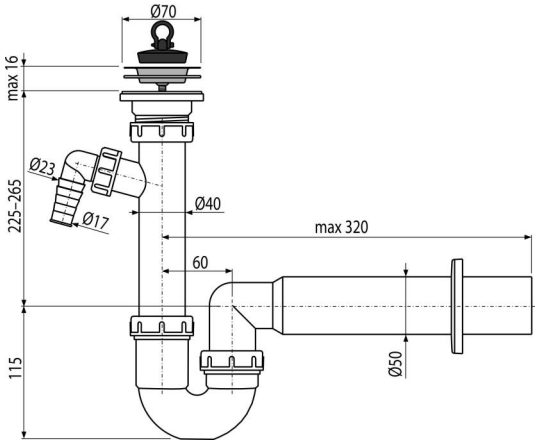

Application
For sink

Features
- Material: polypropylene
- Connection to waste pipe Ø50 mm
- With connector for washing machine or dishwasher

Scope of supply
- Stainless steel outlet grid
- Plastic rosette
- Sink trap body with connector
- PVC plug

Order number, Logistic information

Code	EAN		Weight (piece | packing | palett)	Dimensions (piece | packing)	Quantity (packing | palett)
A810-DN50	8594045938210	50 mm	0,37 | 5,58 | 176,3 kg	300×90×200 | 590×240×390 mm	15 | 420 pcs

Warranty
2/3 years *

Norms
EN 274

Technical specifications
- Hose connector 17-23 mm
- Flow rate 60 l/min
- Thermal resistance 95 ˚C
- Odour trap 64 mm

* For more information about warranty visit https://www.alcadrain.com/warranty.

© 2024 Alcadrain s.r.o | Changes in dimensions and design reserved. | www.alcadrain.com