AVZ104-R402

Outdoor drain channel 100 mm with plastic frame and composite grid B125

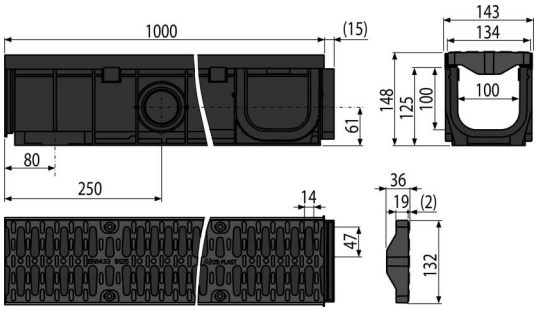

Application

For drainage of areas with occasional passage of cars, sidewalks, pedestrian zones and similar areas for passenger cars

Features

- Numerous ribbing for a firm fixation within surrounding material
- The drain can be simply cut in half to form two equal parts
- The cover of the side opening can also be used as an inlet connector – Ø75 mm
- Material with UV stabilizer against aging, fading and degradation of plastic
- Material: polypropylene filled with talc resistant to mechanical, chemical and thermal damage
- Modular system – optional connection to form "I", "L", "T" or "X" shapes
- Prepared slots for using the locking bars to anchor the drain in concrete
- Ready for optional use of the odour trap with a grid for collection of the dirt
- Water connection from the side of the drain is possible at four locations – Ø50 mm
- Sophisticated and solid locking mechanism for simple connection of the individual drains
- Robust construction – self-supporting
- Composite grid – fixed to the drain with eight stainless steel screws, inlet slit width 14 mm
- Easy access to the drain – easy to clean
- Bottom outlet waste connection Ø110 mm
- Lock system allows easy connecting without additional fixing elements

Scope of supply

- Composite grid – 2×0.5 m – load class B125
- Stainless steel screws for fixing the grid to the drain, 8 pcs
- Drain body with plastic frame

Order number, Logistic information

Code	EAN	Weight (piece | packing | palett)	Dimensions (piece | packing)	Quantity (packing | palett)
AVZ104-R402	8595580547264	3,68 | 3,68 | 240,8 kg	148×1015×143 | mm	1 | 60 pcs

Warranty

2/6 years *

Norms

EN 1433

Technical specifications

- Total installation height 148 mm
- Waste pipe diameter 110 mm
- Flow profile of the drain 95,3 cm^2
- Load class B125 12500 kg
- Inlet cross-section of the composite grid 364,1 cm^2

* For more information about warranty visit https://www.alcadrain.com/warranty.

© 2024 Alcadrain s.r.o | Changes in dimensions and design reserved. | www.alcadrain.com