APZ1116-750 Wall Low

Shower drain with an edge for full grids and fixed vertical flange to the wall, straight outlet

Application

For wheelchair access
For drainage of floor-level showers
For installation close to the wall
For full grids, grid FLOOR for embedding tiles and prismatic grid GAP
For indoor use

Features

- The collar and trap are protected by foil, and the channel itself by a polystyrene insert
- Trap material: polypropylene
- Shower drain material: stainless steel 2 mm, AISI 304, DIN 1.4301
- Mechanically cleanable trap up to the waste pipe
- Possibility to buy a combined odour trap
- Linear drain from stainless steel (hardened by pickling, passivation and electrochemical polishing)
- For inserting full grids – stainless steel, tempered glass, synthetic stone, grid for embedding tiles and prismatic grid
- Self-adhesive tape for quality waterproofing
- Trap firmly connected to the drain – 100% waterproofing
- Installation height from 65 mm
- Adjustable height
- The high flow rate is achieved due to the double compartment trap system
- 25 years guarantee

Scope of supply

- Anchoring set: screw Ø6×50 – 2 pcs, dowel Ø10 – 2 pcs, screw Ø4.2×38 – 3 pcs, dowel Ø8 – 3 pcs
- Installation trough cover - polystyrene
- Protective foil covering for the drain edges and odour trap
- Protective film for trap inlet
- Self-adhesive waterproofing tape
- The shower drain is assembled with the odour trap

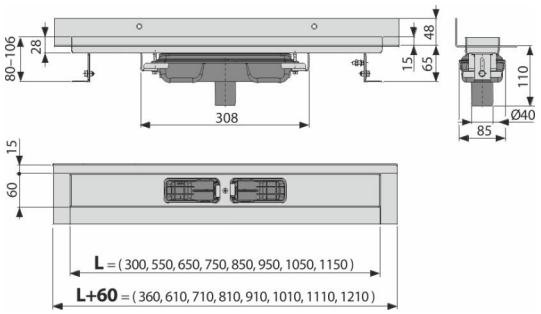

Order number, Logistic information

Code	EAN		Weight (piece | packing | palett)	Dimensions (piece | packing)	Quantity (packing | palett)
APZ1116-750	8595580553289	750 mm	4,09 | 32,75 | 118,2 kg	820×205×160 | mm	8 | 24 pcs

Warranty
2/25 years *

Customs code
39229000

Technical specifications

- Total installation height 80-110 mm
- Minimum thickness of concrete 65 mm
- Resistance of odour trap against the pressure 982 Pa
- Waste pipe diameter 40 mm
- Flow rate 40 l/min
- Load class K3 300 kg
- Odour trap 30 mm

* For more information about warranty visit https://www.alcadrain.com/warranty.

© 2024 Alcadrain s.r.o | Changes in dimensions and design reserved. | www.alcadrain.com