APZ5-SHADE+AEZ124-650 Spa

Waste system for installation in walls, cover stainless steel-matt, lighting rainbow

Application

For wheelchair access
For installation into the wall
For indoor use
Suitable for areas with movement of large number of people – swimming pools, spa, wellness center

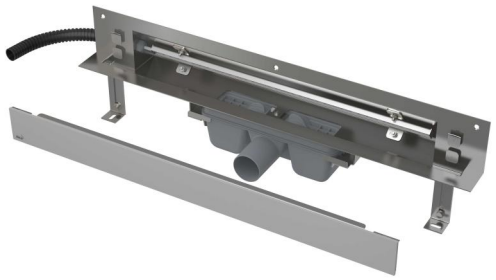

Features

- Illumination colour – RAINBOW combination of colours
- Easily removable cover – stainless steel matt
- The collar and trap are protected by foil, and the channel itself by a polystyrene insert
- Trap material: polypropylene
- Material of drainage channel: stainless steel AISI 304, DIN 1.4301
- Mechanically cleanable trap up to the waste pipe
- Possibility to buy a combined odour trap
- Powered by the electric supply, the power source must be purchased separately – recommended AEZ311
- Necessary to solve separately the switching of the lighting
- Lighting already installed in factory
- LED lighting strip, which is incorporated into the body of the linear drain
- Linear drain from stainless steel (hardened by pickling, passivation and electrochemical polishing)
- Self-adhesive tape for quality waterproofing
- Trap firmly connected to the drain – 100% waterproofing
- Installation depth 64 mm
- The system is placed outside the area of mechanical stress
- Rainbow version with RGB module – the possibility of varying colours, saturation and intensity of the back light via remote control
- Water flows into the drain only between the edge of the floor tiles and the cover of the drain system
- The high flow rate is achieved due to the double compartment trap system
- 25 years guarantee

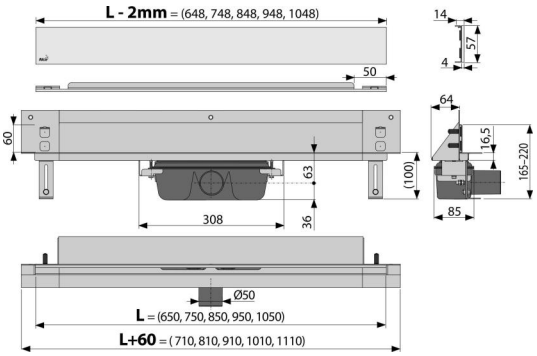

Scope of supply

- Fixing hardware for anchoring the adjustable legs: screw M6×12 – 2 pcs
- Anchoring set: screw Ø6×50 – 2 pcs, dowel Ø10 – 2 pcs, screw Ø4.2×38 – 3 pcs, dowel Ø8 – 3 pcs
- Installation channel cover
- Stainless steel design grid SHADE matt
- The collar and the odour trap inlet are covered by the protective foil
- Illumination Rainbow
- Self-adhesive waterproofing tape
- The shower drain is assembled with the odour trap

Order number, Logistic information

Code	EAN		Weight (piece | packing | palett)	Dimensions (piece | packing)	Quantity (packing | palett)
APZ5-SHADE+AEZ124-650	8595580570118	124 mm	5,67 | 45,33 | 156,0 kg	1120×160×205 | mm	8 | 24 pcs

Warranty	Customs code	Norms
2/25 years *	39229000	EN 1253

Technical specifications

- Total installation height 165-220 mm
- Minimum thickness of concrete 100 mm
- Resistance of odour trap against the pressure 982 Pa
- Waste pipe diameter 50 mm
- Flow rate 60-68,8 l/min
- Cover width 60 mm
- Installation depth 64 mm
- Odour trap 50 mm

* For more information about warranty visit https://www.alcadrain.com/warranty.

© 2024 Alcadrain s.r.o | Changes in dimensions and design reserved. | www.alcadrain.com