P156Z-ECO-1800

Double connector DN40/32 / 8–23 with valves

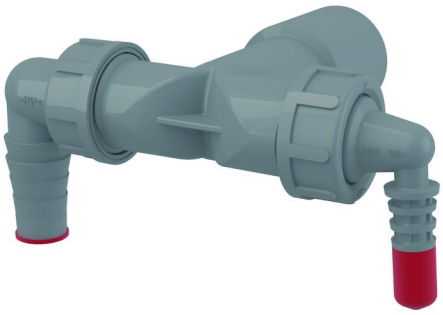

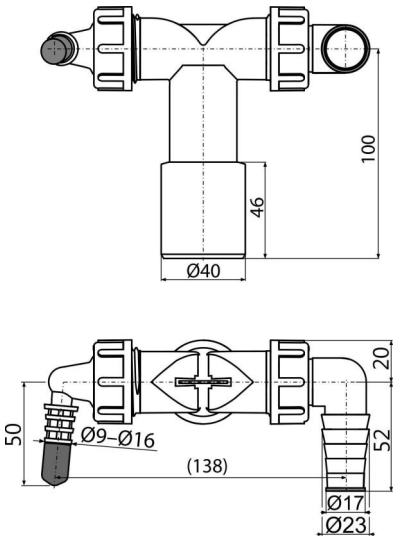

Application

For the connection of up to two appliances
For washing machines and other traps
Connects various appliances to the waste pipe

Features

- Two connectors for various electrical appliances – washing machines, dishwashers, dryers, boilers, air conditioning, heat recovery, etc.
- Valves with partition serve to direct the flow of water into the waste
- Material: recycled polypropylene
- Low carbon footprint
- Direct connection to HT DN40/DN32 – no need of another trap when installing additional household appliance
- Made in Czech Republic
- Zero waste production process
- The red plug is used for blinding the connector if it is not used.

Scope of supply

- Elbow 17–23 mm - 1 pc, Elbow 8–16 mm 1 pc
- Connector body
- Seal
- Connector seals 2 pcs
- Plug 1 pc
- Return valve 2 pcs

Order number, Logistic information

Code	EAN	Weight (piece | packing | palett)	Dimensions (piece | packing)	Quantity (packing | palett)
P156Z-ECO-1800	8595580582418	0,11 | 5,53 | 108,4 kg	125×72×94. | 590×390×240. mm	50. | 800. pcs

Warranty	Customs code
2/2 years	39174000

Technical specifications

- Hose connector 8-16 mm
- Hose connector 17-23 mm
- Thread for connection to the trap 1 "

© 2024 Alcadrain s.r.o | Changes in dimensions and design reserved. |